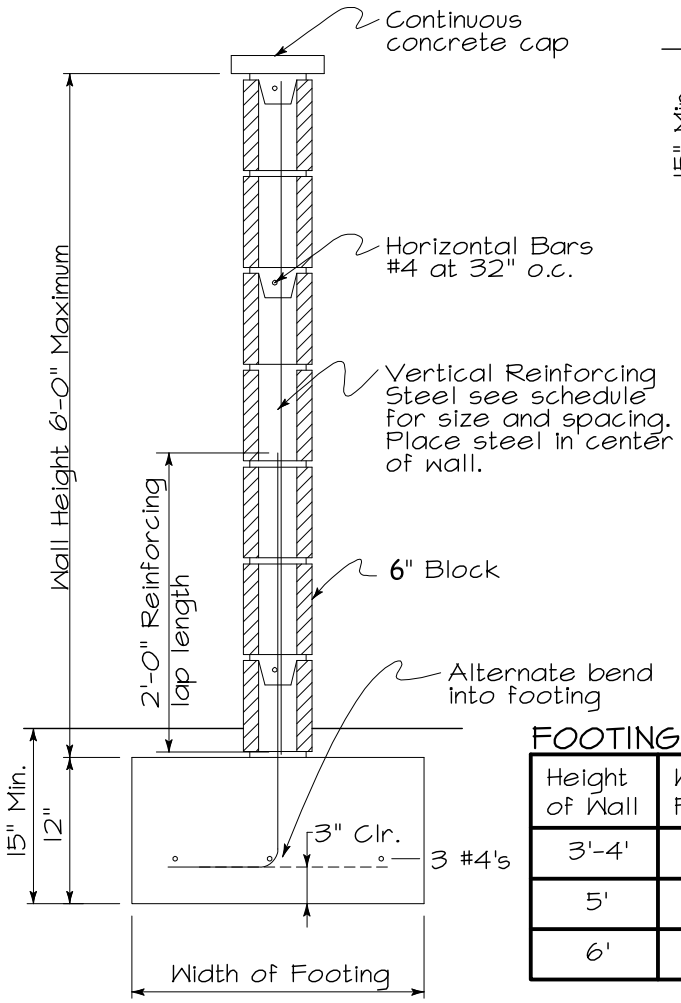

MASONRY FENCE DETAIL & ALTERNATE FOOTING A

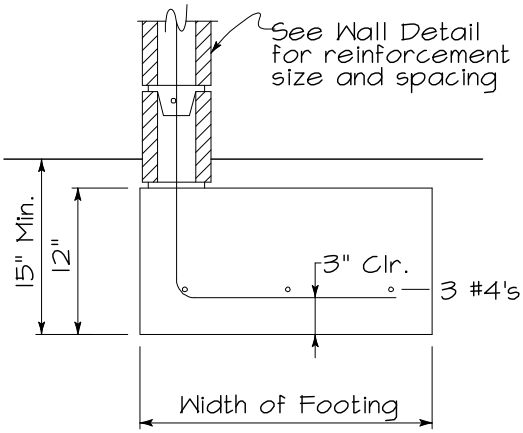

ALTERNATE FOOTING B

FOOTING B

Height of Wall	Width of Footing
3'-4'	22"
5'	30"
6'	34"

FOOTING A

Height of Wall	Width of Footing
3'-4'	18"
5'	24"
6'	26"

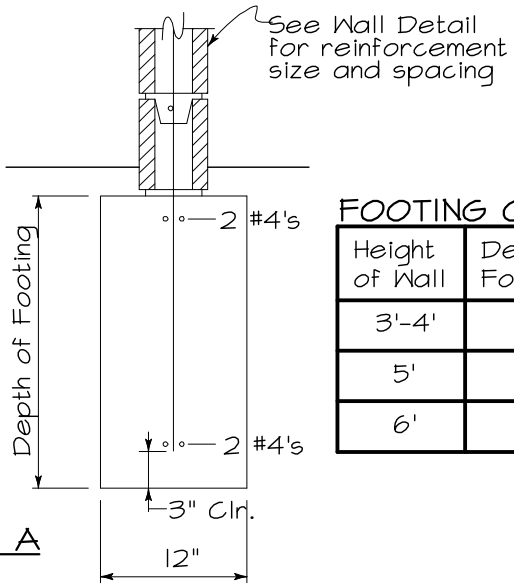

ALTERNATE FOOTING C

FOOTING C

Height of Wall	Depth of Footing
3'-4'	24"
5'	29"
6'	32"

GENERAL NOTES

1. Concrete blocks shall be Grade N units.
2. Use f'c = 2500 psi for concrete footing.
3. Reinforcing steel shall be A615 Grade 40 or 60.
4. Fill all cells containing steel with grout, including bond beam.
5. The wall shall be plumb and all block courses shall be level.
6. Reinforcing steel splices shall be a minimum of 24".
7. The first course may be set in fresh concrete for footing.
8. No wall or fence shall be allowed within 36" of a fire hydrant and no wall, fence, or foundation shall be allowed within 12" of a water meter.
9. Planning regulates the height, location, and design of the wall based on the zone, location on the property, and community design standards. Planning must approve the plans prior to any permit being issued.

REINFORCING STEEL TABLE

Height of Wall	Vertical Steel
5'-0" or less	#4 @ 32" o.c.
6'-0" or less	#4 @ 24" o.c.

NOTE: This wall is not designed to be used for a retaining wall

CITY OF SEAL BEACH CALIFORNIA

BLOCK GARDEN WALL

HELP FOR THE HOMEOWNER
SEAL BEACH BUILDING AND SAFETY

Darik Doggett — Building Official: — Date: 2/23/10

DATE: 1/1/08 | SHEET 1 OF 1 | B801